NETNORTH

BUSINESS ISP

# Terms & Conditions
# Server Hosting

V1.03 2015

## Contents


**1. Charging and Invoices ..... 2**

1.1 Set up charges ..... 2

1.2 Invoicing ..... 2

**2. Netnorth Service Demarcation Diagram ..... 2**

2.1 NIC ..... 2

2.2 NF ..... 3

2.3 Service Demarcation ..... 3

2.4 Connectivity Demarcation ..... 3

2.5 Software Demarcation ..... 3

**3. Scope of Service ..... 3**

**4. Netnorth's Core Network Guarantees ..... 3**

4.1 Guarantee Coverage ..... 3

4.2 Exclusions ..... 3

4.3 Claims ..... 4

4.4 Network Availability Service Level Guarantee ..... 4

4.5 Netnorth Latency Service Level Guarantee ..... 4

4.6 Netnorth Packet Success Service Level Guarantee ..... 4

**5. Tail and Off-Net Circuits ..... 5**

**6. Use of Service ..... 5**

**7. Network Numbers ..... 5**

7.1 Address Routing ..... 5

7.2 Address Assignment ..... 5

7.3 Address Duration ..... 5

## Preamble

These terms cover the following types of Netnorth hosting services:

- Colocated Server Hosting
- Rented Server Hosting
- Rented Virtual Server Hosting

These terms should be read in conjunction with a service agreement, and any applicable Netnorth policies:

- General Terms & Conditions www.netnorth.co.uk/support/docs/general.tc
- Acceptable Use Policy www.netnorth.co.uk/support/docs/acceptable.use.policy
- Privacy Policy www.netnorth.co.uk/support/docs/privacy.policy
- Support Policy www.netnorth.co.uk/support/docs/support.policy

# 1. Charging and Invoices

### 1.1 Set up charges

Set up charges are subject to further technical survey and may be over and above those stated on the Service Agreement Order. Netnorth may provide a revised quote in the event that additional installation work is required. Any additional charge will be agreed with the Customer prior to commencement of work.

### 1.2 Invoicing

Netnorth shall invoice any applicable one-off charges (including any options selected in accordance with the Service Agreement Order) immediately upon the execution of this Agreement.

All other charges will be invoiced monthly in advance from the commencement of the Initial Term.

# 2. Netnorth Service Demarcation Diagram

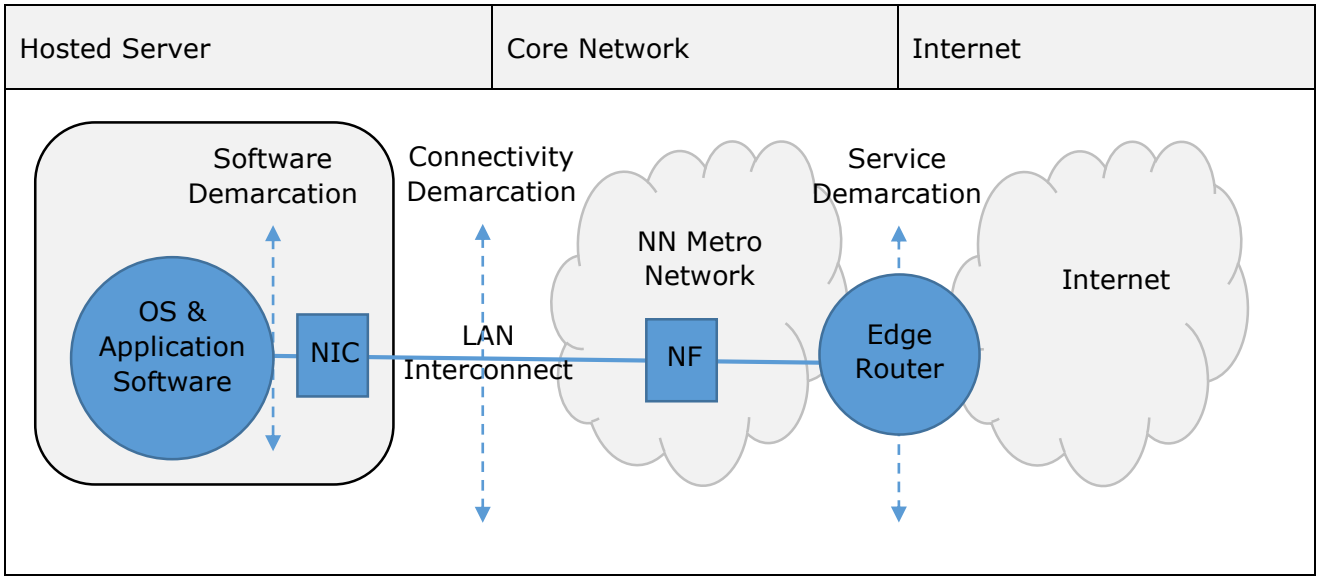


### 2.1 NIC

NIC (Network Interface Controller) = the point at which the Core Network LAN Interconnect is physically connected to the Hosted server.

2.2 **NF**

NF (Network Fabric) = the Core Network equipment (e.g. a data switches, routers, firewalls, security devices or similar) provided by Netnorth to manage and monitor a service provided by Netnorth, residing within the Netnorth Metro Network.

2.3 **Service Demarcation**

Service Demarcation = the demarcation of responsibility between the Netnorth service (as defined by the telecommunications carrier's NTE interface) and the general Internet.

2.4 **Connectivity Demarcation**

Connectivity Demarcation = the demarcation of responsibility between the Netnorth service (as defined by the Hosted Server NIC interface) and the Netnorth Core Network.

2.5 **Software Demarcation**

Software Demarcation = the demarcation of responsibility between the Netnorth Server Hardware and any, installed / configured / hosted, OS / application / data.

## 3. Scope of Service

3.1 Where a service is sold as Rented hosting, Netnorth is responsible for managing and maintaining the service as provided between the Service Demarcation point and the Software Demarcation point.

3.2 Where the service is sold as Colocated hosting, Netnorth is responsible for managing and maintaining the service as provided between the Service Demarcation point and the Connectivity Demarcation point.

3.3 Where a service is sold as Managed hosting, Netnorth is responsible for managing and maintaining the service beyond the Software Demarcation point, only to the extent that has been previously scheduled and agreed with the Customer.

3.4 Netnorth has no direct control over the availability of bandwidth over the entirety of the Internet and Netnorth shall not be responsible for delays caused by overuse of or lack of such bandwidth outside its Core Network.

3.5 Notwithstanding Netnorth's best endeavours to provide and maintain data integrity within any hosted service for the duration of that service, the incidental replication of data and server imaging for Netnorth's own DR purposes should not be deemed to be a backup product or data retention service. However where reasonably practicable, and subject to settled accounts, any such data shall be made available to the customer until cessation of those services. Thereafter all data, be it stored in a production environment or as part of any planned / incidental imaging or backup services, shall be securely disposed of at Netnorth's discretion. Ultimately the onus remains with the customer to ensure that data is secured outwith the Netnorth metro network for the purposes of recovery and reuse in any DR plan that they may care to implement.

## 4. Netnorth's Core Network Guarantees

4.1 **Guarantee Coverage**

The Network Availability, Latency and Packet Success Service Level Guarantees are applicable to the Netnorth Core Network, as defined by the relevant Network Demarcation points.

4.2 **Exclusions**

Network unavailability shall not include periods of an hour or less, or any unavailability resulting from (a) Network maintenance, (b) circuits provided by telecommunications' providers or other

common carriers, (c) an external Internet Service Provider or an Internet exchange point, (d) acts or omissions of Customer or an authorised user, (e) behaviour of Customer Equipment, facilities or applications, or (f) acts of God, civil disorder, natural cataclysm or other occurrences beyond the reasonable control of Netnorth.

Netnorth shall not extend a credit for latency or packet failure if such a failure to meet the Guarantee is attributable to acts of God, civil disorder, natural cataclysm or other occurrences beyond the reasonable control of Netnorth.

### 4.3 Claims

To receive the credit if any of the below Guarantees has not been met, Customer must email support@netnorth.co.uk within 30 days of the end of the month for which credit is requested. The Customer shall only be entitled to claim in respect of one section of the Guarantee per day.

In the case of a potential claim, a month's network performance statistics relating to the Guarantees shall be sent to the Customer upon written request to the Netnorth Customer Support Department (or via email to support@netnorth.co.uk). Please note that this facility is not intended for use except in the case of a potential claim.

### 4.4 Network Availability Service Level Guarantee

Netnorth's Network Availability Service Level Guarantee ("Guarantee") is that the Netnorth Core Network shall be available 99.9% of the time. The Netnorth Core Network Fabric is comprised of a combination of equipment, servers, circuits, and other data transmission facilities operated by Netnorth Ltd. and is illustrated in the diagram above. This Guarantee shall be measured based on the number of minutes that the Netnorth Core Network was not available as determined by Netnorth based on the following conditions ("Unavailability").

**Core Network Availability: 99.9%**

If Netnorth determines that the Core Network is unavailable for one (1) or more consecutive hours during any calendar month, Netnorth, upon the customer's request, shall credit the customer's monthly invoice the charges for one (1) day’s rental of the Netnorth service for each consecutive hour, up to a maximum of seven (7) days per month.

### 4.5 Netnorth Latency Service Level Guarantee

Netnorth's Latency Service Level Guarantee ("Guarantee") is based on an average round-trip transmission between Netnorth designated backbone PoPs. Latency shall be measured by Netnorth averaging sample measurements taken during a calendar month between Core Network PoPs.

**Core Network Latency: 85 milliseconds or less**

Should Netnorth fail to meet the Guarantee in two consecutive calendar months, a Customer is entitled to a credit of one (1) day’s rental for the Netnorth service for the second month and an additional one (1) day’s rental for any consecutive month in which the Guarantee is not met.

### 4.6 Netnorth Packet Success Service Level Guarantee

Netnorth's packet success goal is based on the successful delivery of packets through the Netnorth Core Network. Unsuccessful packets are deemed to be those dropped due to transmission errors or router overload before exiting the Netnorth regional IP backbone.

**Core Network Packet Success: 99.9% packet success**

Netnorth's packet success Service Level Guarantee ("Guarantee") is that successful delivery of packets shall meet or exceed 99.9% between Netnorth-designated Core Network paths for the Netnorth services. Should Netnorth fail to meet the Guarantee in two consecutive calendar months, the Customer shall be entitled to a one (1) day’s rental for the Netnorth service for the second month, and an additional one (1) day pro-rata credit for any consecutive month in which the Guarantee is not met.

## 5. Tail and Off-Net Circuits

In the event of the failure of a Tail Circuit (a telecommunications carrier's circuit between a Netnorth PoP and the general Internet), a credit will be made by Netnorth to the Customer provided that Netnorth is able to secure an equivalent amount from the circuit provider.

## 6. Use of Service

6.1 The Customer must ensure that nothing is transmitted by or on behalf of the Customer or using the Customer's equipment through the Service or downloaded in violation of any UK or international law, regulation or treaty or Netnorth's Abuse Policy* or in breach of the intellectual property rights of any person.

6.2 The Customer acknowledges that, by the nature of the Service being provided, information and material downloaded or used by the Customer shall be kept, whether permanently or temporarily on Netnorth's equipment. The Customer shall at all times ensure that such information and material complies with the laws of all applicable jurisdictions.

6.3 The Service is provided exclusively to the Customer, and those members of its staff and others engaged by the Customer to perform work for the Customer.

6.4 The Customer indemnifies Netnorth from and against all costs, claims, liabilities and demands relating to or arising from a breach of this Section. A breach of this Section 6 and/or Netnorth's Abuse Policy shall be grounds for Netnorth to immediately suspend the service.

* Netnorth's Abuse policy is Netnorth's rules concerning acceptable usage, published at http://www.netnorth.co.uk/support from time to time. Netnorth reserves the right to amend the Netnorth Abuse Policy from time to time, effective upon posting of the amendment(s) to that site or other notice to the Customer.

## 7. Network Numbers

7.1 **Address Routing**

Netnorth shall route existing TCP/IP addresses that were previously assigned to the Customer only if those addresses were assigned to the Customer directly and not through another internet service provider. Netnorth shall not be held responsible if other internet service providers refuse to accept these addresses.

7.2 **Address Assignment**

Netnorth shall assign new or additional TCP/IP addresses as requested by the Customer upon being provided with satisfactory documentation justifying the need for those addresses, subject to availability and additional charges. The documentation must be in accordance with the policies set forth by RIPE ( or such other organisation that assigns TCP/IP Addresses for use by Internet Providers and their customers in Europe, from time to time). In certain circumstances it may be necessary for TCP/IP addresses to be approved by RIPE, and in such cases Netnorth shall not be responsible for any decision made by RIPE.

7.3 **Address Duration**

When Netnorth assigns addresses to the Customer, those addresses are assigned only for the duration of the Service and become invalid at such time as Netnorth no longer provides the Service to the Customer. A temporary extension (usually thirty (30) days from the end of the Services) may be made at Netnorth's sole discretion. After termination or after such period (if any) those addresses may be reassigned to other customers by Netnorth.

If the Customer wishes to apply for addresses that shall subsist beyond the duration of the Service, it must do so directly to RIPE. Any decision by RIPE or by another Internet Service

Provider relating to TCP/IP addresses is the responsibility of RIPE or of that other Internet Service Provider and Netnorth accepts no responsibility for any such decision.

All IP addresses assigned by Netnorth are non-portable.

In respect of any actions taken by Netnorth pursuant to this section, Netnorth may levy reasonable additional charges on the Customer as agreed in advance.